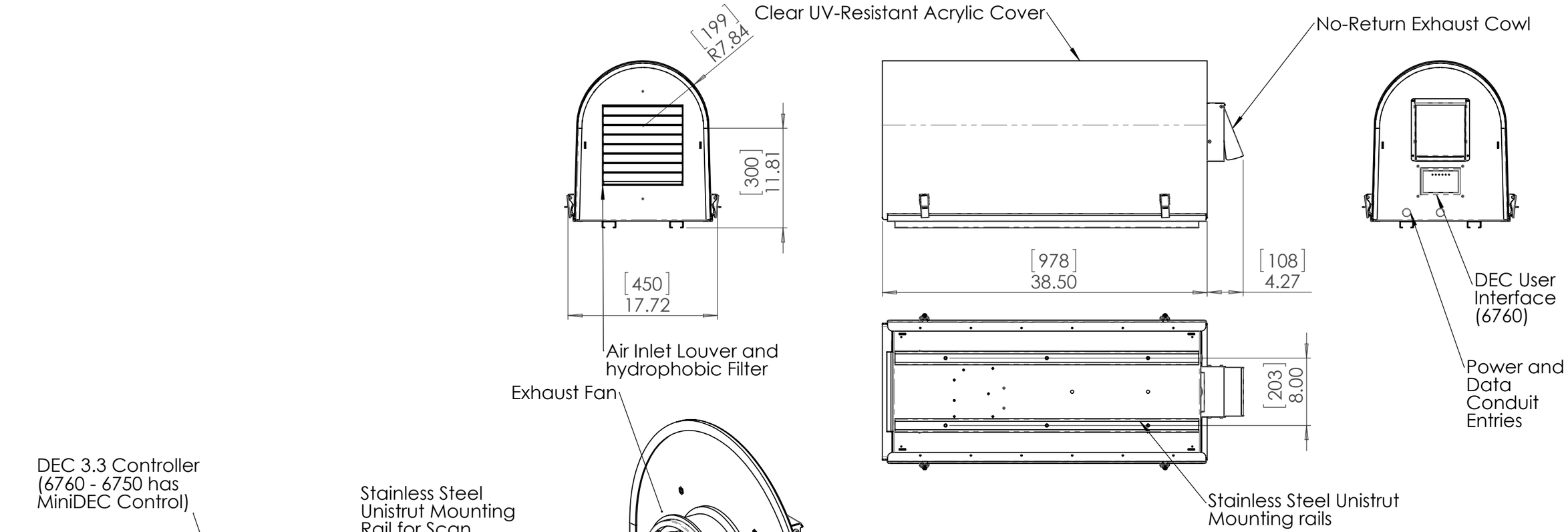

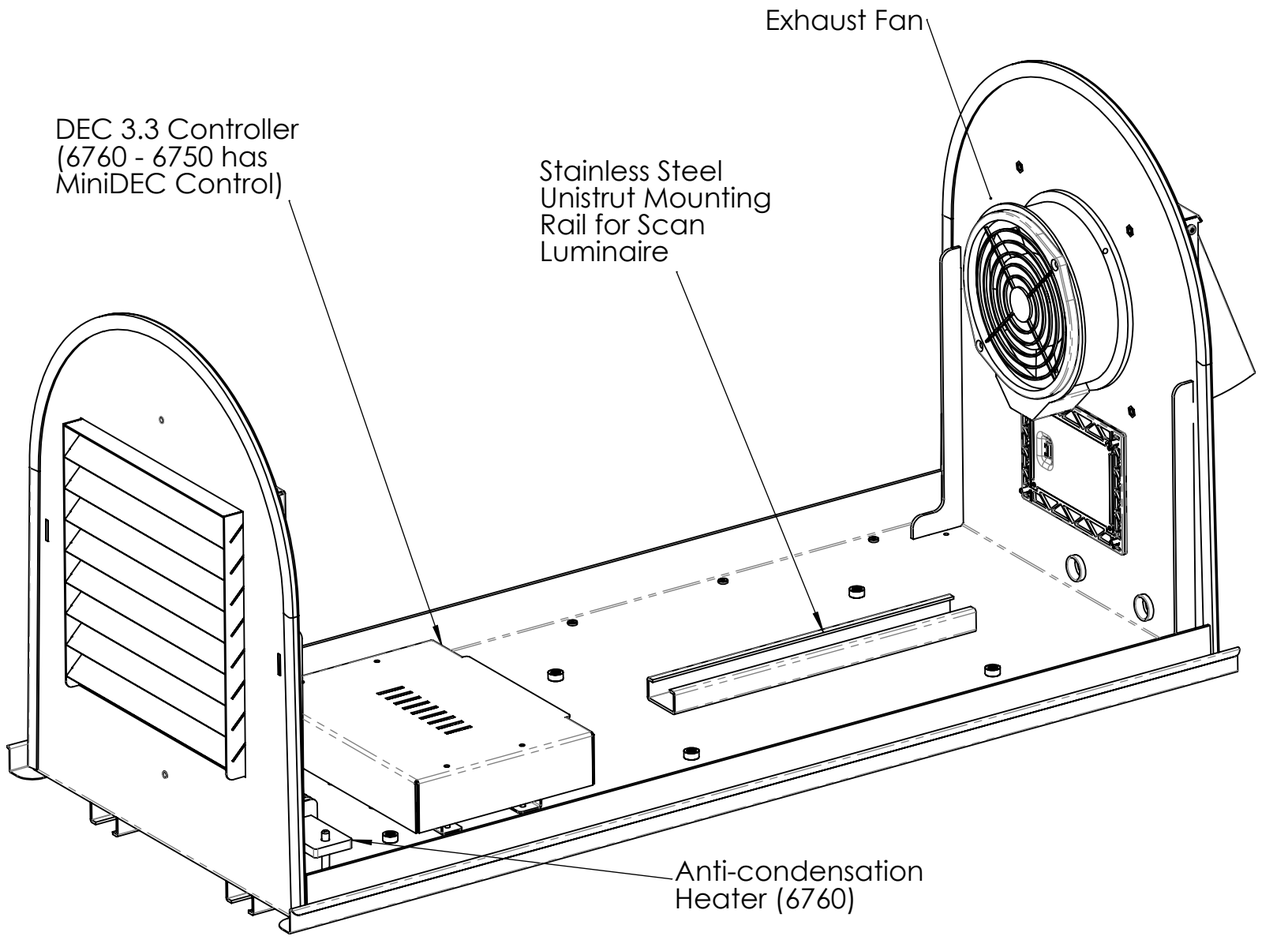

MODEL NUMBERS

6750.IN Thunder Scan 6750, DEC3.3, 230V

6750.US Thunder Scan 6750, DEC3.3, 120V

UNLESS OTHERWISE SPECIFIED:
DIMENSIONS ARE IN INCHES
TOLERANCES:
FRACTIONAL ±
ANGULAR: MACH ± BEND ±
TWO PLACE DECIMAL ±
THREE PLACE DECIMAL ±
INTERPRET GEOMETRIC TOLERANCING PER:

MATERIAL
Aluminum, Stainless Steel and Acrylic

FINISH

DO NOT SCALE DRAWING

	NAME	DATE
DRAWN	TB	9/11/2013
CHECKED		
ENG APPR.		
MFG APPR.		
Q.A.		

COMMENTS:

TEMPEST lighting inc.

TITLE:
Thunder Scan 6750 Enclosure

SIZE B | DWG. NO. 6750.xx | REV 02

SCALE: 1:10 | SHEET 1 OF 1