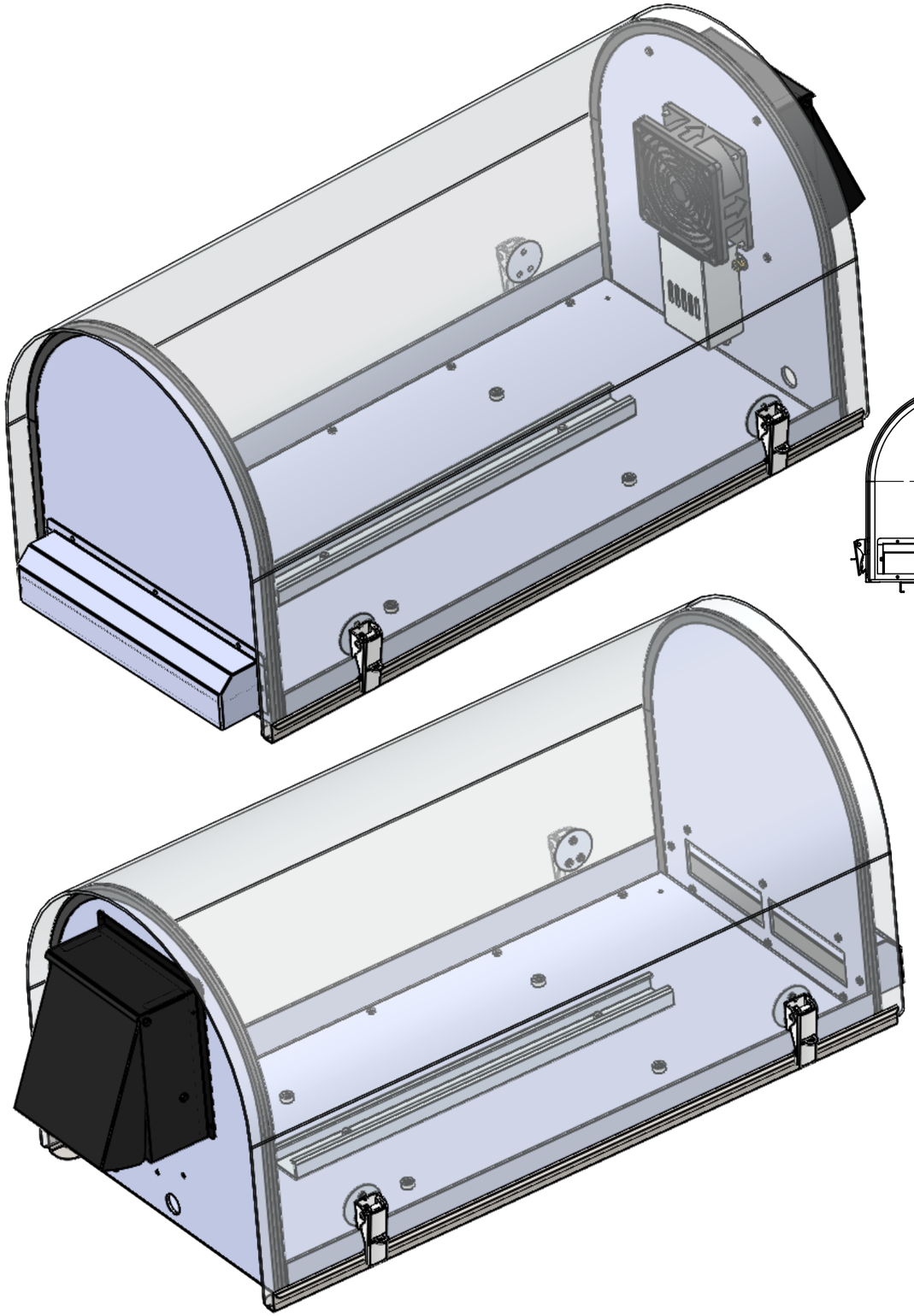

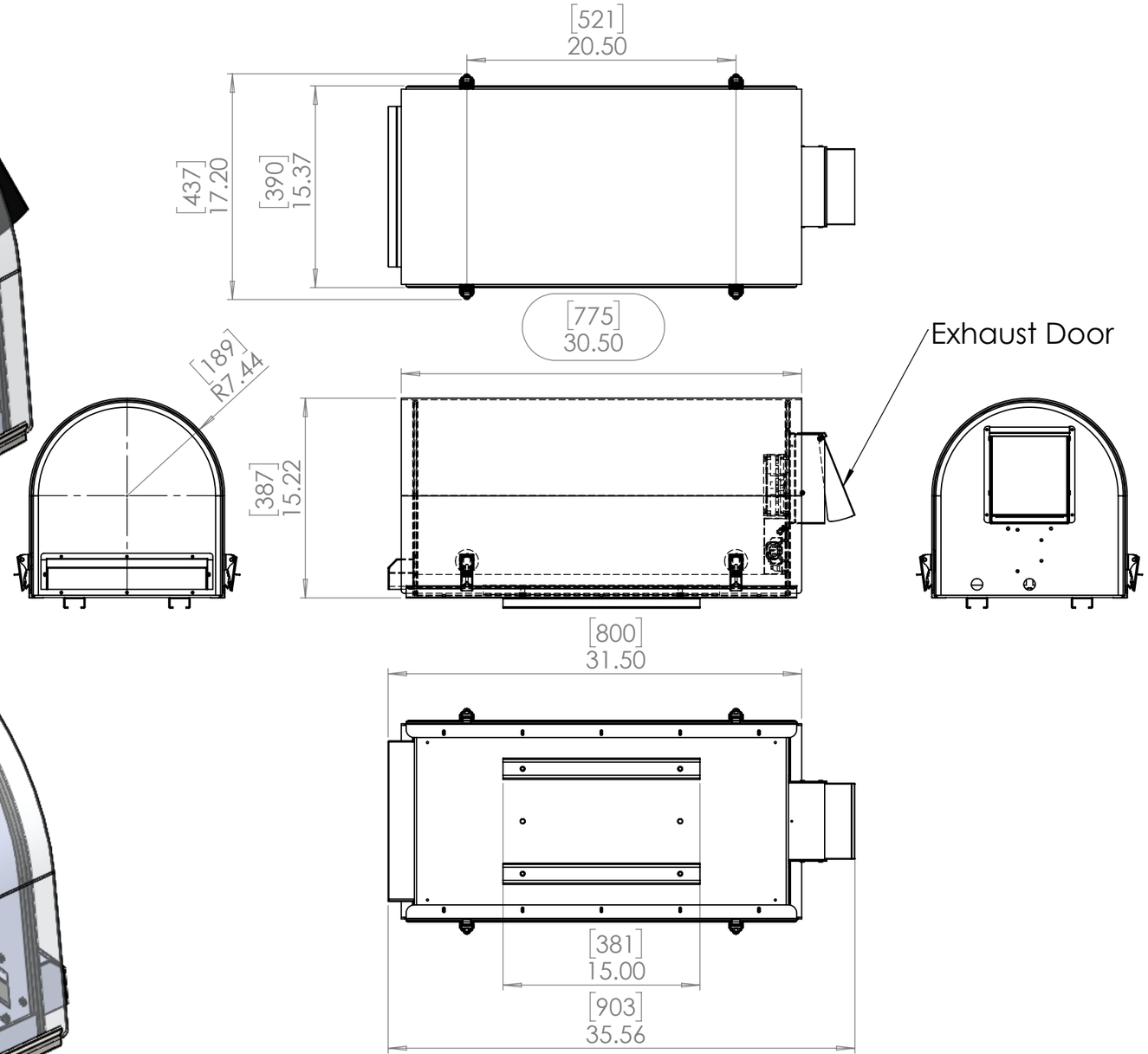

UNLESS OTHERWISE SPECIFIED:
DIMENSIONS ARE IN INCHES
TOLERANCES:
FRACTIONAL ±
ANGULAR: MACH ± BEND ±
TWO PLACE DECIMAL ±
THREE PLACE DECIMAL ±
INTERPRET GEOMETRIC TOLERANCING PER:

MATERIAL
Aluminum, Plexiglass

FINISH
Powder Coat (Base)

DO NOT SCALE DRAWING

	NAME	DATE
DRAWN	GNG	7/12/2016
CHECKED		
ENG APPR.		
MFG APPR.		
Q.A.		

COMMENTS:

TEMPEST lighting inc.

TITLE:
Thunder 6650

SIZE	DWG. NO.	REV
B	6650.xx	01

SCALE: 1:10 SHEET 1 OF 1